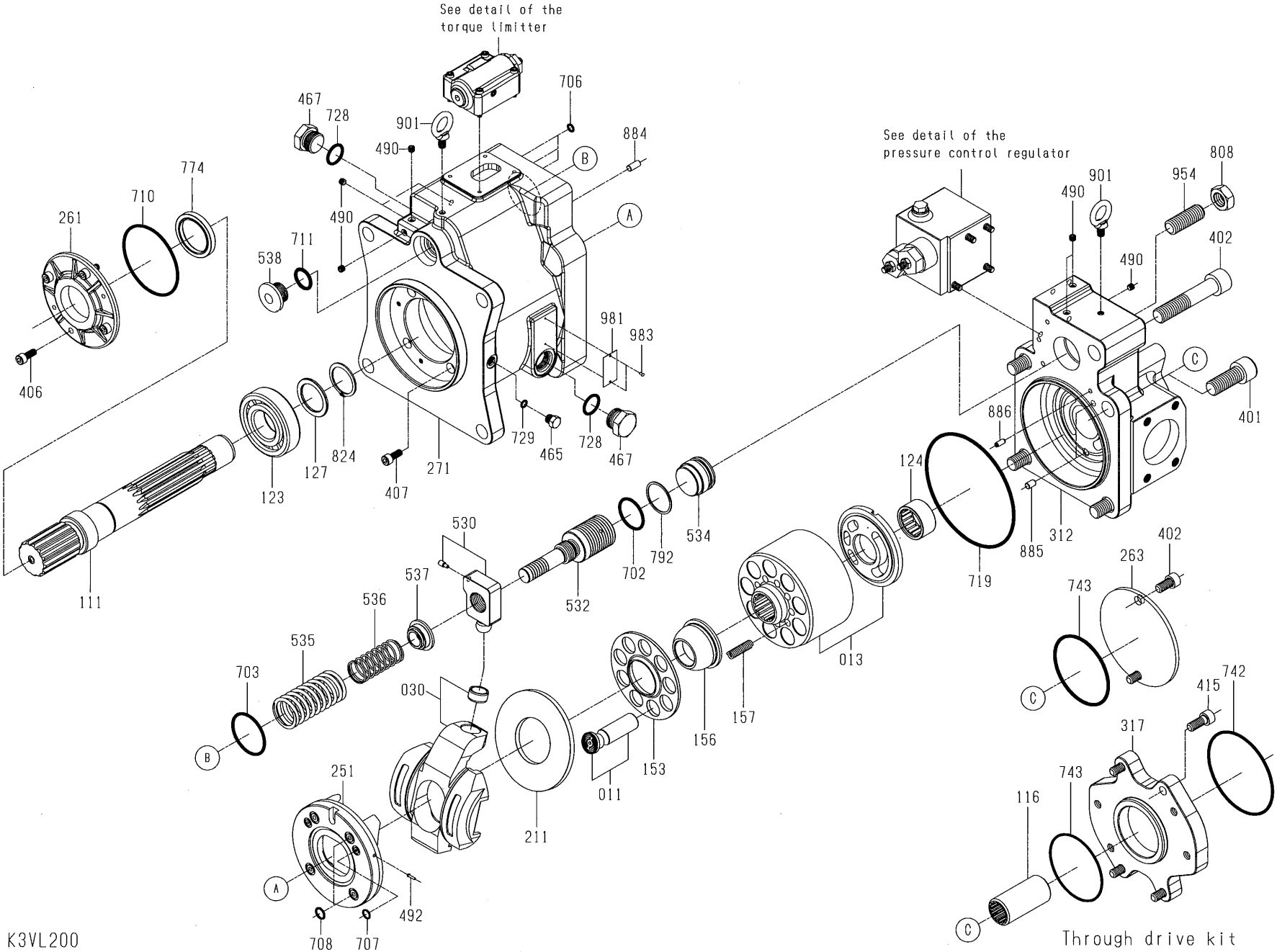
See detail of the torque limitter
See detail of the pressure control regulator
467
728
901
706
490
884
B
A
774
710
261
711
538
981
983
406
123
127
824
271
407
729
465
728
467
111
530
537
536
535
703
B
030
251
A
708
707
492
211
011
153
156
157
013
702
792
534
532
124
719
886
885
312
490
901
954
808
402
490
C
401
743
C
263
402
415
742
317
743
116
C
Through drive kit

K3VL200

Revision

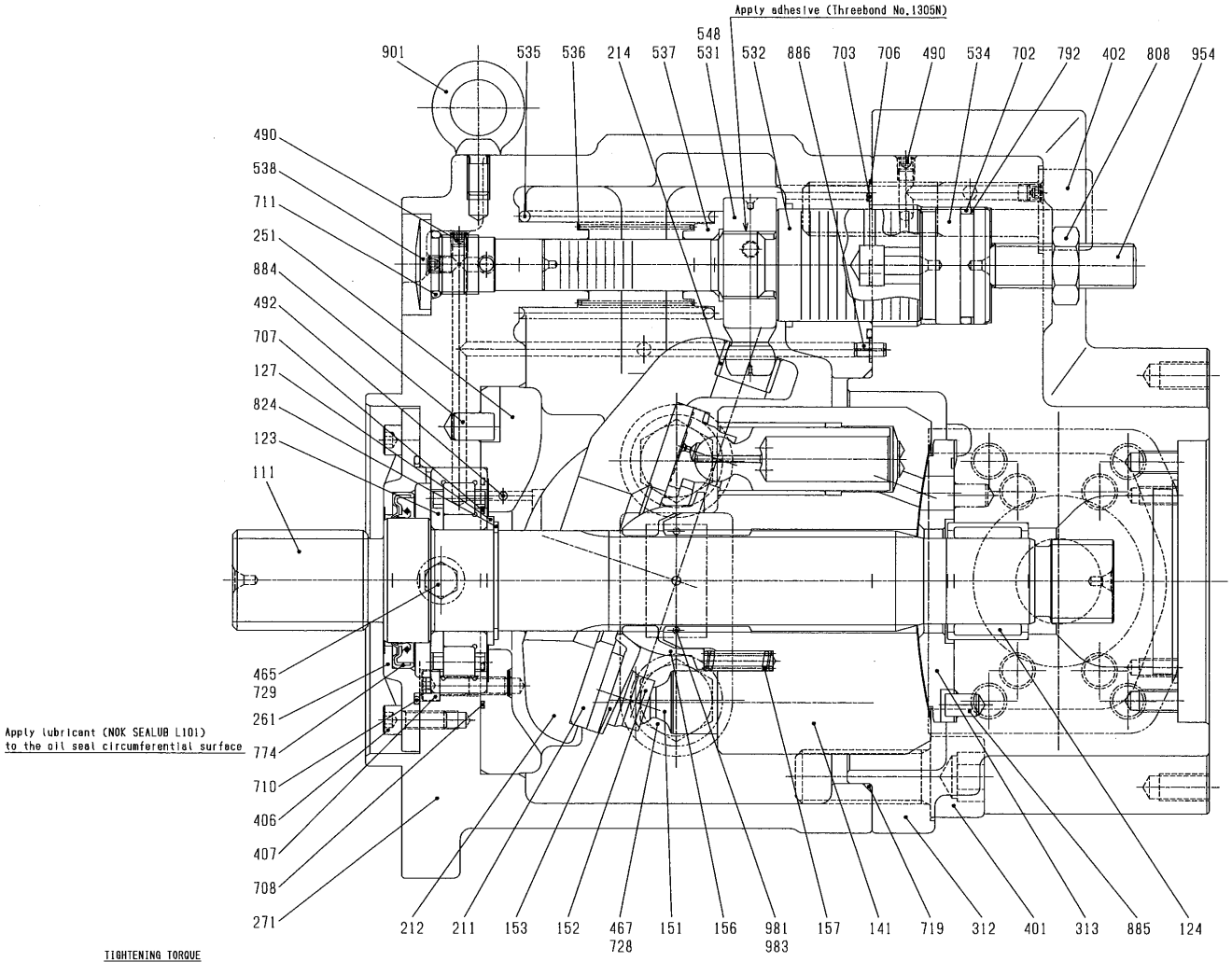

CLASS.	No.	PART NAME	MATERIAL	Q'TY
C	983	PIN	COPPER ALLOY	2
C	981	PLATE, name	Al ALLOY	1
C	954	SCREW, set	ALLOY STEEL	1
D	901	BOLT, eye	CARBON STEEL	2
D	886	PIN, spring	TOOL STEEL	1
C	885	PIN, valve plate	BEARING STEEL	2
C	884	PIN	BEARING STEEL	1
D	824	RING, snap	TOOL STEEL	1
D	808	NUT	CARBON STEEL	1
D	792	RING, back-up	SYNTHETIC RESIN	1
C	774	SEAL, oil	FLUORO RUBBER	1
D	729	O-RING	NBR	1
D	728	O-RING	NBR	2
D	719	O-RING	NBR	1
D	711	O-RING	NBR	1
D	710	O-RING	NBR	1
D	708	O-RING	NBR	4
D	707	O-RING	NBR	2
C	706	SQUARE-RING	FLUORO RUBBER	3
C	703	O-RING	FLUORO RUBBER	1
C	702	O-RING	FLUORO RUBBER	1
/	548	PIN, feed back	BEARING STEEL	1
C	538	PLUG	CARBON STEEL	1
C	537	SEAT, spring	CARBON STEEL	1
C	536	SPRING, inner	SPRING STEEL	1
C	535	SPRING, outer	SPRING STEEL	1
C	534	STOPPER (L)	ALLOY STEEL	1
C	532	PISTON, servo	ALLOY STEEL	1
/	531	PIN, tilting	ALLOY STEEL	1
C	492	KOENIG PLUG	Al ALLOY	1
C	490	PLUG	CARBON STEEL	7
C	467	PLUG	CARBON STEEL	2
C	465	PLUG	CARBON STEEL	1
D	407	SCREW, hex.S.H.C.	ALLOY STEEL	4
D	406	SCREW, hex.S.H.C.	ALLOY STEEL	4
D	402	SCREW, hex.S.H.C.	ALLOY STEEL	1
D	401	SCREW, hex.S.H.C.	ALLOY STEEL	4
/	313	PLATE, valve	ALLOY STEEL	1
C	312	COVER, valve	DUCTILE	1
C	271	CASING, pump	CAST IRON	1
C	261	COVER, seal	Al ALLOY	1
C	251	SUPPORT, S.P.	CAST IRON	1
/	214	BUSH, tilting	BEARING STEEL	1
/	212	PLATE, swash	DUCTILE	1
C	211	PLATE, shoe	BEARING STEEL	1
C	157	SPRING, cylinder	SPRING STEEL	9
C	156	BUSH, spherical	CAST IRON	1
C	153	PLATE, set	ALLOY STEEL	1
/	152	SHOE	COPPER ALLOY	9
/	151	PISTON	ALLOY STEEL	9
/	141	BLOCK, cylinder	STEEL+COPPER ALLOY	1
C	127	SPACER, bearing	ALLOY STEEL	1
C	124	BEARING, needle	BEARING STEEL	1
C	123	BEARING, roller	BEARING STEEL	1
C	111	SHAFT, drive	ALLOY STEEL	1

TIGHTENING TORQUE

NO.	NOMINAL DESIGNATION OF SCREW THREAD	TIGHTENING TORQUE N·m
401, 402	M24	780
406, 407	M8	30
465	7/16-20UNF	12
	M14x1.5	25
467	1-1/16-12UN	170
	M27x2.0	170
490	NPTF1/16	8.8
531, 532	M30x2.0	430
538	G 3/4	240
808	M20	240

B	530	ASS'Y, tilting pin	1ST	531 (1PC), 548 (1PC)
B	030	ASS'Y, swash plate	1ST	212 (1PC), 214 (1PC)
B	013	ASS'Y, cylinder	1ST	141 (1PC), 313 (1PC)
B	011	ASS'Y, piston	1ST	151 (9PC), 152 (9PC)
CLASS.	NO.	PART NAME	Q'TY	CONSTITUENT PART NO. (Q'TY)

SUPPLY CLASSIFICATION

B	PARTS SUPPLIED SUB-ASSEMBLED
/	CONSTITUENTS OF B (NOT INDIVIDUALLY SUPPLIED)
C	PARTS INDIVIDUALLY SUPPLIED
D	STANDARDIZED PARTS COMMONLY AVAILABLE

MATERIAL	–	APPROVED	PRODUCT NOMC 29
MASS	100 kg	CHECKED 1	
SCALE	1/1.5	CHECKED 2	K3VL200
3 RD ANGLE PROJECTION		CHECKED 3	CROSS SECTION
DATE	Nov.04,2013	DRAWN	Y.horie/T.Tanaka
PART NO.		DWG. NO.	02446-xxxx

DELIVERY

SHEET TOTAL

KAWASAKI HEAVY INDUSTRIES, LTD. PRECISION MACHINERY COMPANY

(A1)